Technical Data Sheet

Comfort Plus Forced Air

Electric Thermal Storage Heating System

Models 4120, 4130, 4140

STEFFES Heating Systems

Unit and Duct Opening Dimensions

- Unit is factory configured for left-to-right or right-to-left air flow.
- Downflow configuation is available with the addition of the optional downflow kit accessory. In downflow configuration, the furnace must be installed in a fashion that allows access to the supply blower's plenum cover. It is recommended to elevate the furnace a minimum of 10" to achieve this access.
- Return air plenum can be ordered as an optional accessory from the factory.
- Unit will fit through a 30" doorway without disassembling. For smaller openings or for ease in moving, the unit can be disassembled.

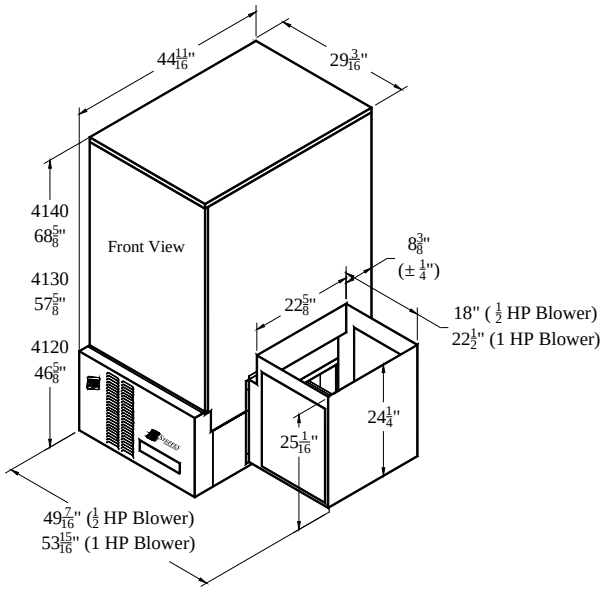

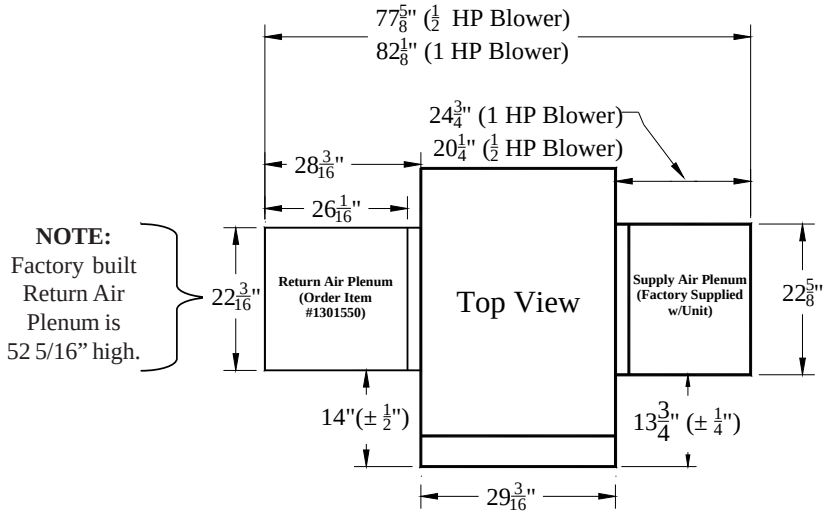

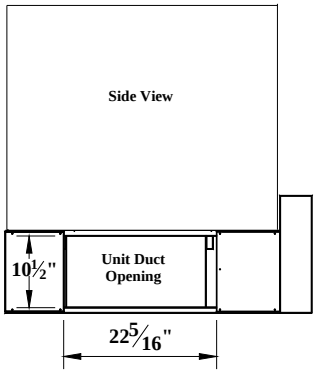

Placement and Clearances

- The area in which the Comfort Plus unit is installed must remain free of debris and adequate ventilation is required to maintain room temperature of less than 85°F.
- Adhere to all national and local electrical and building code placement requirements for electric heating appliances.
- An 18" high stand is available from the factory to elevate the system if necessary.

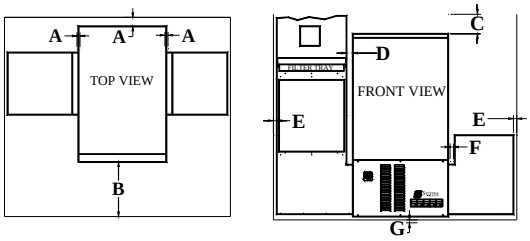

A Back and sides = 3 inches (from combustible material)
B Front = 36 inches (for ease in servicing)
C Top = 6 inches (from combustible material)
D Between Duct and Left side of system = 2 inches
E Outer Sides of Return and Supply Ducts = zero clearance
F Between Duct and Right side of system = zero clearance
G Bottom = zero clearance

Low Voltage Peak Control Connections

- If using the optional Steffes Power Line Carrier Transceiver or Steffes Time Clock Module for peak control, the direct wiring shown here is not necessary.

Variable Speed ECM Blower

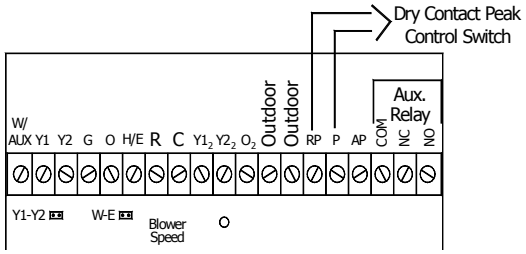

Line Voltage Field Connections and Circuit Phasing

- The breakers on the Comfort Plus are intended for service disconnect only. The 15 amp breaker powers the blowers and system controls circuit. The 60 amp breakers power the element circuits.
- Units are factory configured with multiple circuit, single phase connections. If single feed is desired, a single feed kit is available from the factory. Phase balancing is recommended when making connections in 3-phase applications.

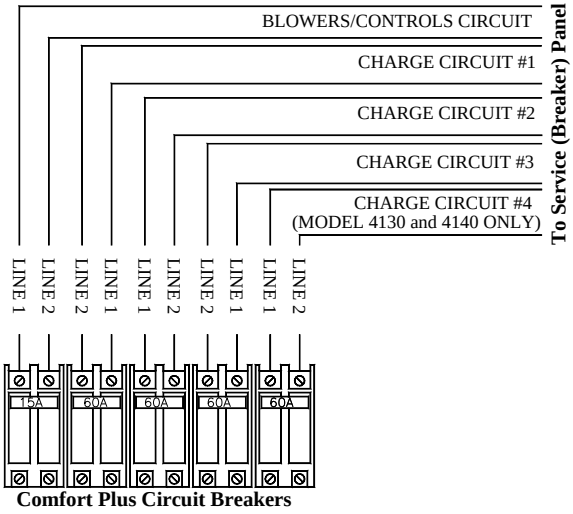

Comfort Plus Circuit Breakers

Supply Air Delivery Matrix

- External static pressure should not exceed .75 inches water column.
- A supply blower must be specified with each furnace. Available options include a 1/2 HP or 1 HP variable speed ECM blower.
- ½ HP configuration can accommodate most 1.5 to 4 ton heating/cooling coils.
- 1 HP configuration can accommodate most 3 to 5 ton heating/cooling coils.
- Interfaces to multi-speed air conditioners or heat pumps. When interfaced to a 2-stage air conditioner or heat pump, the ECM motor will operate at 70% of the selected air flow in low speed (Stage 1) compressor mode. If 50% air flow is required in low speed, a Stage 1 speed adjusting relay must be installed. Steffes recommends the Allen Bradley Relay #700-HA32A24 with Relay Base #700-HN125 or equivalent.

Variable Speed ECM Blower Option:

Configuration	Field Selectable Air Flows (CFM)
½ HP	1000, 1200, 1400, 1600
1 HP	1200, 1400, 1600, 2000

Low Voltage Wall Thermostat, Sensor, and Compressor Connections

- 24 VAC wall thermostat must be used. Honeywell brands shown in schematics and recommended.
- A digital wall thermostat is recommended for use with Comfort Plus systems. If utilizing a mechanical wall thermostat, it may be necessary to add a load resistor (250 ohm, 5 watt) due to the low current draw (.01 amp) on the heat call input circuit.
- An outdoor sensor is included with the system to provide outdoor temperatures for automatic charge control (regulation of stored heat).

Stand Alone Furnace Application with Variable Speed Supply Blower
Connections shown for Single Stage Heating / Single Stage Cooling

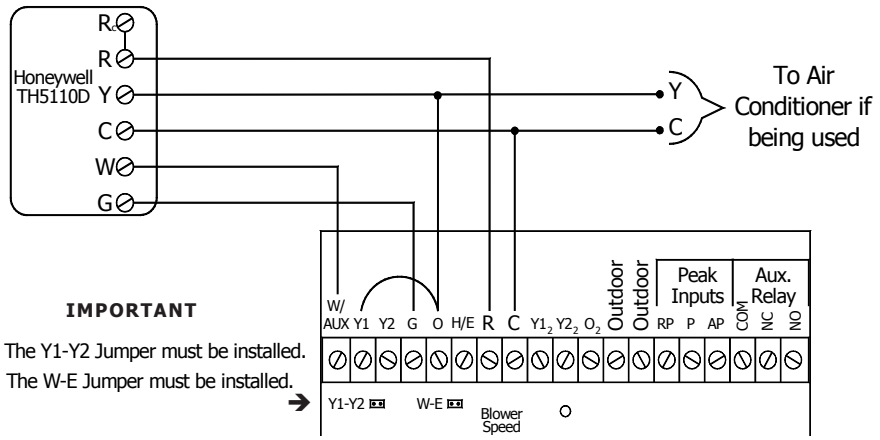

Single Stage Heat Pump with Variable Speed Supply Blower

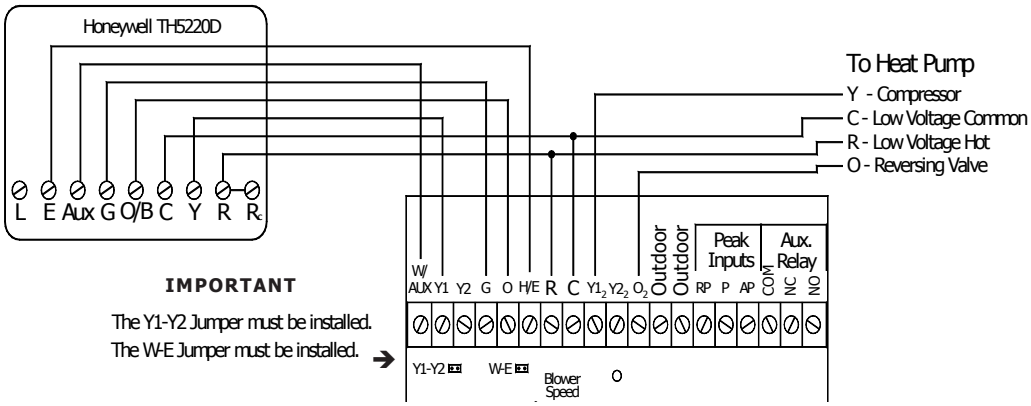

Two Stage Heat Pump with Variable Speed Supply Blower

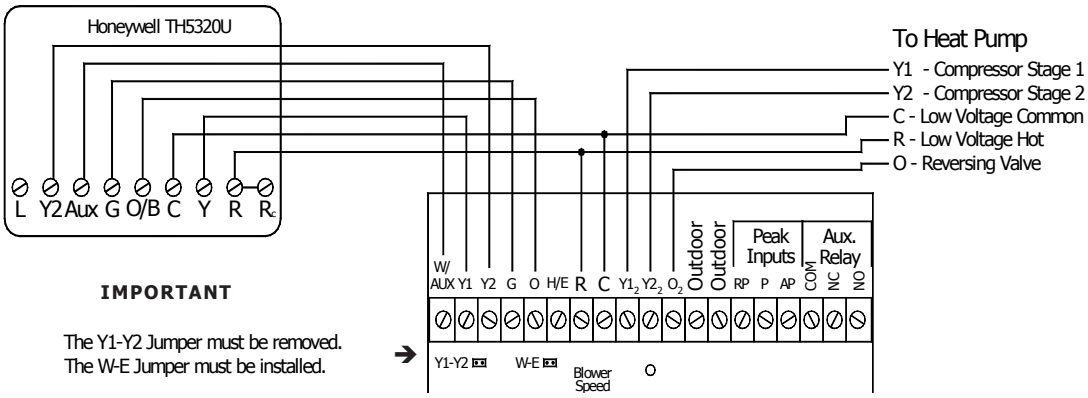

Specifications for Standard 240VAC Systems

MODEL	4120			4130		4140	
Charging Input (See Note 1)	14.0 kW	19.2 kW	24.8 kW	28.8 kW	37.2 kW	38.4 kW	45.6 kW
Single Feed: Minimum Circuit Ampacity (240V Systems) (Includes 25% Derate for Continuous Load)	81	109	138	159	203	209	247
Element Current Draw	59 AMPS	80 AMPS	104 AMPS	120 AMPS	155 AMPS	160 AMPS	190 AMPS
Element Circuits Required (See Note 2)	1 - 20 AMP 2 - 30 AMP	1 - 30 AMP 2 - 40 AMP	1 - 40 AMP 2 - 50 AMP	4 - 40 AMP	4 - 50 AMP	4 - 50 AMP	4 - 60 AMP
Blowers/Controls Circuit Required (See Note 2)	One – 15 AMP (7 AMPS maximum load)						
Storage Capacity (See Note 3)	120 kWh (426,500 BTU)			180 kWh (614,160 BTU)		240 kWh (818,880 BTU)	
Approximate Installed Weight	2,183 lbs			3,031 lbs		3,859 lbs	
Maximum Coil Dimensions – (See Note 4) W x D x H	26" x 22 1/16" x 30 15/16"						
Maximum Maintainable Heat Loss (See Note 3)							
8 Consecutive Charge Hours (BTU/hr)	20,414	28,013	34,188	42,002	49,201	55,991	65,613
12 Consecutive Charge Hours (BTU/hr)	30,621	42,002	45,550	62,986	65,613	84,003	87,484
18 Consecutive Charge Hours (BTU/hr)	45,931	62,986	81,376	94,478	122,047	125,971	131,225

Note 1: Standard configuration (240V) systems can be connected to 208V; however, the charging input of the system will be derated by 25%. If 208V specific charging voltage is required, it is available as a special factory order. For 277V systems, refer to the 6100 series.

Note 2: Unit is factory configured to be field connected to multiple line voltage circuits. If single feed to the element and blowers/system controls circuits is desired, an optional single feed kit is available to order.

Note 3: The size and heating ability of the system required for an installation is dependent on the heat loss of the area and the power company's off-peak hours. In addition, if the unit is not installed within the heated area, heat lost statically must be taken into account when sizing a system. Contact Steffes Corporation for assistance in selecting an appropriately sized system.

Note 4: The indoor coil and outdoor compressor of an air conditioner or heat pump are not included with the ETS system. A return air plenum, configured for housing an indoor coil, can be ordered from the factory as an optional accessory. Dimensions listed are that of the inner coil area in this plenum. For larger coils, field provisions to the factory built plenum are necessary or one will need to be custom built by the installer. (In heat pump applications, the indoor coil MUST be placed on the return air side.)